Impact of AI Loads on the Electric Grids

Strategies to counter technical challenges

ISGF Conference, March 11th, 2026

Introduction

- Manish Mohanpurkar (SMIEEE) is an Electrical Engineer with more than 18 years of experience in power systems, renewable energy, storage, and microgrids
- Received the Ph.D. from Colorado State University, M.S. from Oklahoma State University and B.E. from Government College of Engineering, Aurangabad, Maharashtra
- Over a decade experience in R&D at US Dept. of Energy's national lab complex – Idaho National Laboratory and National Renewable Energy Lab
- Managed Hitachi Energy Product offerings of BESS (utility scale and distribution level) and Microgrids for North American market
- Currently serving as Principal for R&D Delivery at Fortescue helping productize and commercialize decarbonization related technologies for utilities grids and mining sector
- LinkedIN: https://www.linkedin.com/in/manishmohanpurkar/
- Scholar: https://scholar.google.com/citations?user=8X87GdMAAAAJ&hl=en
  - Published: 50+ articles and >3030 citations

Disclaimer

The views in this deck are my personal opinions and is in no way reflection of current or past employers.

AI Loads and Major Initiatives in the US

- Multiple Industry consortiums – EPRI Open Power AI Consortium, Open Compute, Emerge Alliance, Current/OS, etc.
- NERC – Large Load Task Force, ERCOT Large Load Working Group, PJM Interconnection Initiatives
- Multiple university, national lab frameworks, and other groups are trying address the various challenges
- These challenges can be:
  - Technical: power, water, cooling, real estate, integration, etc.
  - Supply chain disruptions and concentration
  - Generation/facility interconnection queues
  - Policy considerations such as tariffs and grid upgrade costs

Power consumption

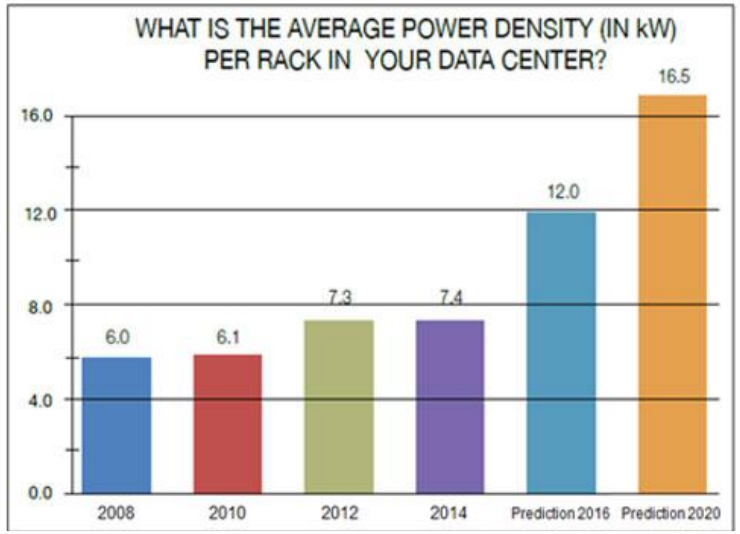

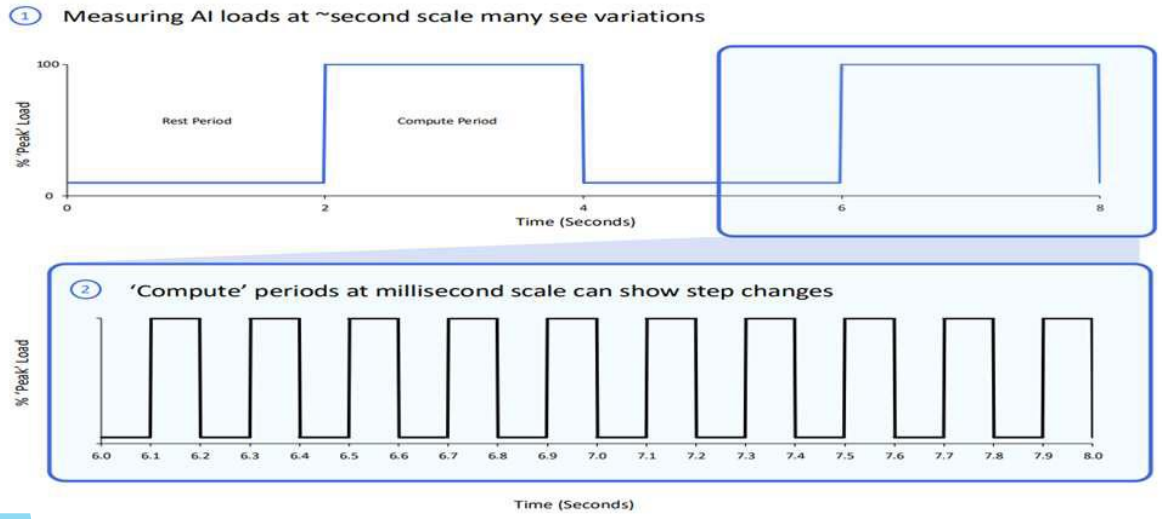

https://www.deltapowersolutions.com/en/mcis/technical-article-data-center-power-and-cooling-strategies-for-increasing-rack-power-density.php

- **Power consumption:**
  - As an example: NVDIA GPUs have grown from 40kW/rack (Hopper) to 1 MW/rack (Rubin Ultra)
  - **Individual GPU Power:**
    H100 SXM5: Up to 700W.
    H100 NVL: Up to 800W.
    GH200 Grace Hopper: Up to 1000W per module.
- Voltage challenges: rack power consumptions are exceeding the 50V traditional supply voltage to 800 V
- Originally characterized by 100ms durations with cycles of intense matrix computation and data exchange, including microsecond overshoots of up to 130%
- Reliability of power supply for advanced AI data centers are training: 99.9% and inference: 99.999%

Characteristics and Risks of Emerging Large Loads, Large Loads Task Force White Paper July 2025

Aggregated AI Training Load profiles

- At-scale GPU clusters are now common implying few hundred thousands
- Distribution hence has transitioned to MV
- These demands can cause a lot of issues such as internal fault trips (unwanted), challenging power quality, high ramps at the POC, etc.
- AI loads have caused early GPU failures and premature fuse failures in tap-off boxes, often leading to over-sized equipment as a temporary fix
- Cycling of power is extreme and can lead to overall pulsed loads on the grid due to aggregation

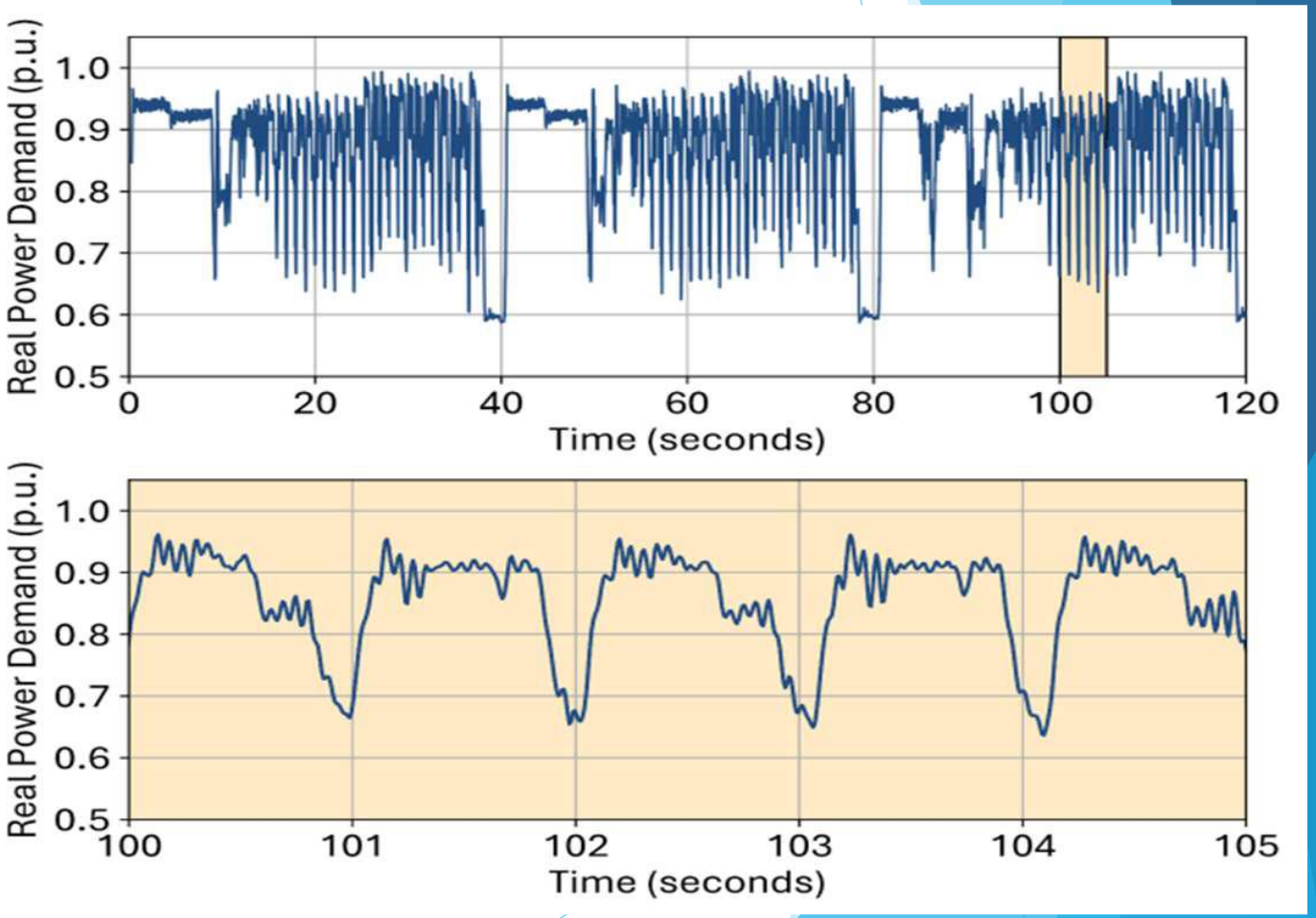

Characteristics and Risks of Emerging Large Loads, Large Loads Task Force White Paper July 2025

High Level Data Center Representation

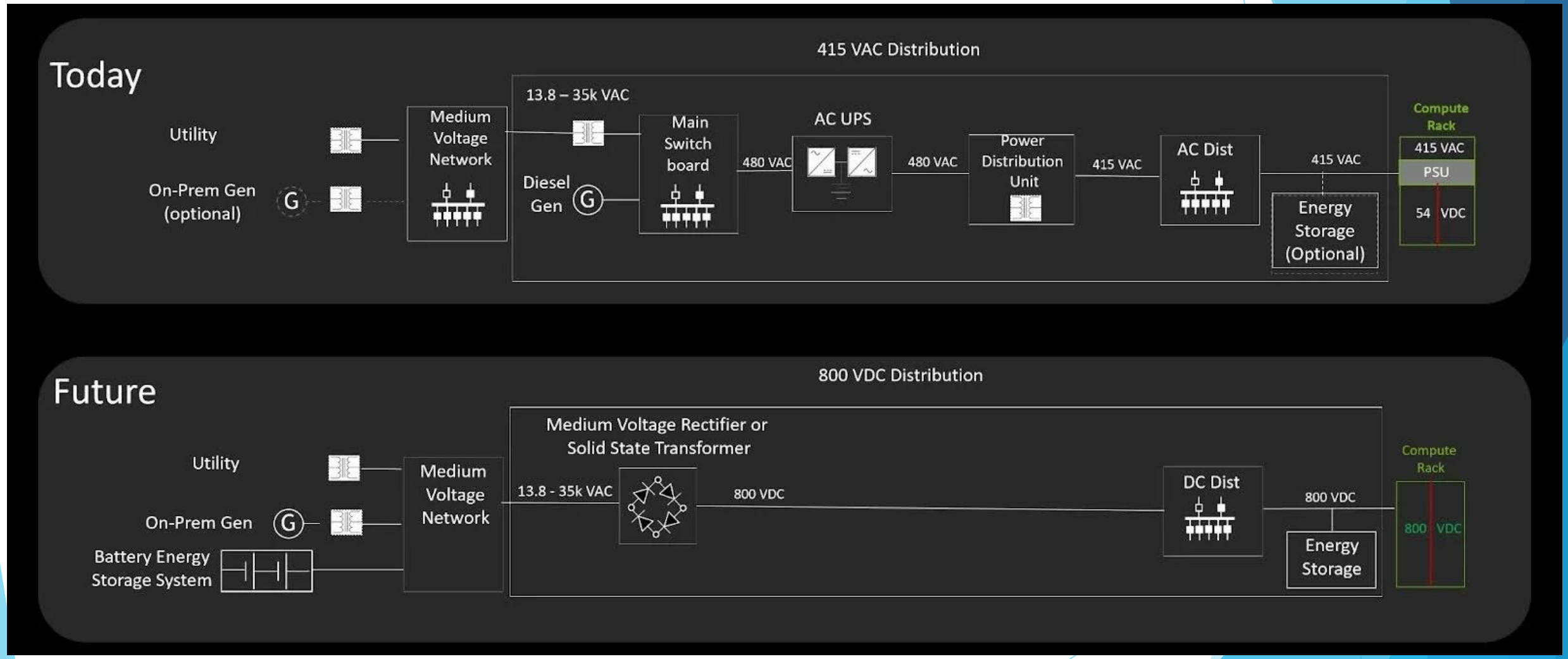

https://developer-blogs.nvidia.com/wp-content/uploads/2025/10/800-VDC-power-distribution-jpg.webp

Grid faults and impacts on AI infrastructure

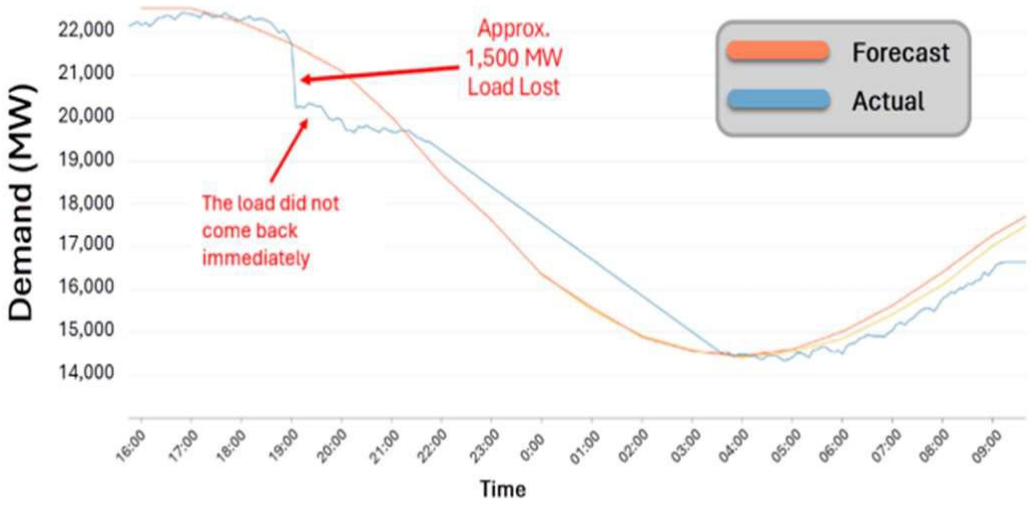

Time of Event: Around 7:00 PM Eastern on July 10, 2024.

Initial Cause: Failure of a lightning arrestor on a 230 kV transmission line in the Eastern Interconnection.

Fault Sequence and Duration:

- The transmission line had auto-reclosing enabled with three reclose attempts at each end of the line. This configuration caused six successive faults over a period of 82 s.
- Each time the line attempted to reclose, the permanent fault reappeared, triggering additional faults.
- Shortest event lasted 42 ms (initial fault) and longest 66 ms

System Impact:

- During the fault events, voltage levels in the affected area dropped between 0.25 and 0.40 per unit, resulting in AI load transfer to rack level batteries.
- Temporary overvoltage transients were created as a result of after fault recovery
- The disturbance contributed to approximately 1.5 GW of load dropping in the PJM system, likely due to voltage-sensitive loads or protection responses triggered by the deep voltage dips and temporary over voltages

Mitigation Strategies – I
STATCOM at the HV

- Two main strategies here:
  - E-STATCOM with energy-stored
  - STATCOM with GFM capabilities
- E-STATCOM with energy storage can provide management of power transients as well as ramp management
- STATCOM with GFM can provide black start capabilities, V-f control, and inertial support
- Typical unit size 115 MVA with split 50% MVAr and MW power cycling
- Typical Voltage range: 34.5 kV – 750 kV Modular, scalable multiple units based on MMC converter and Valve technology

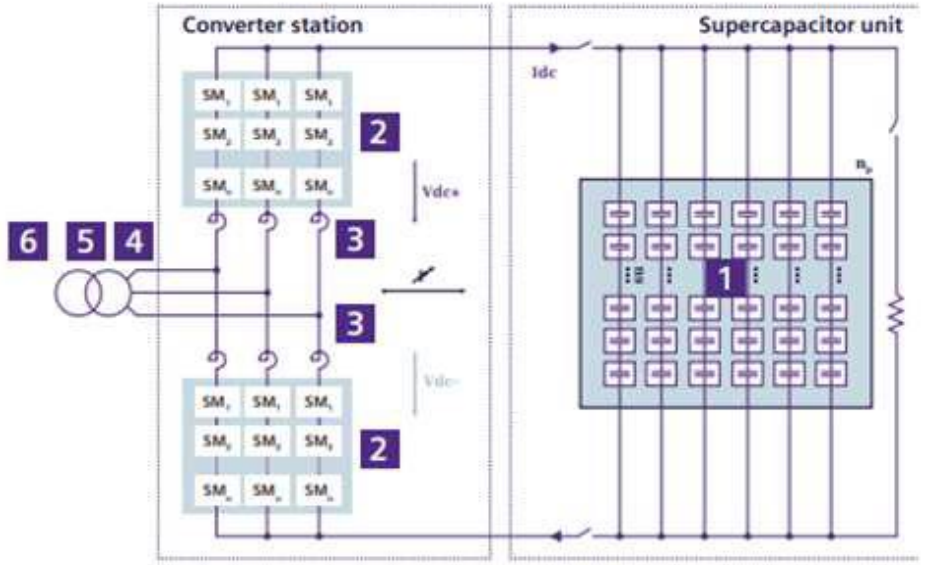

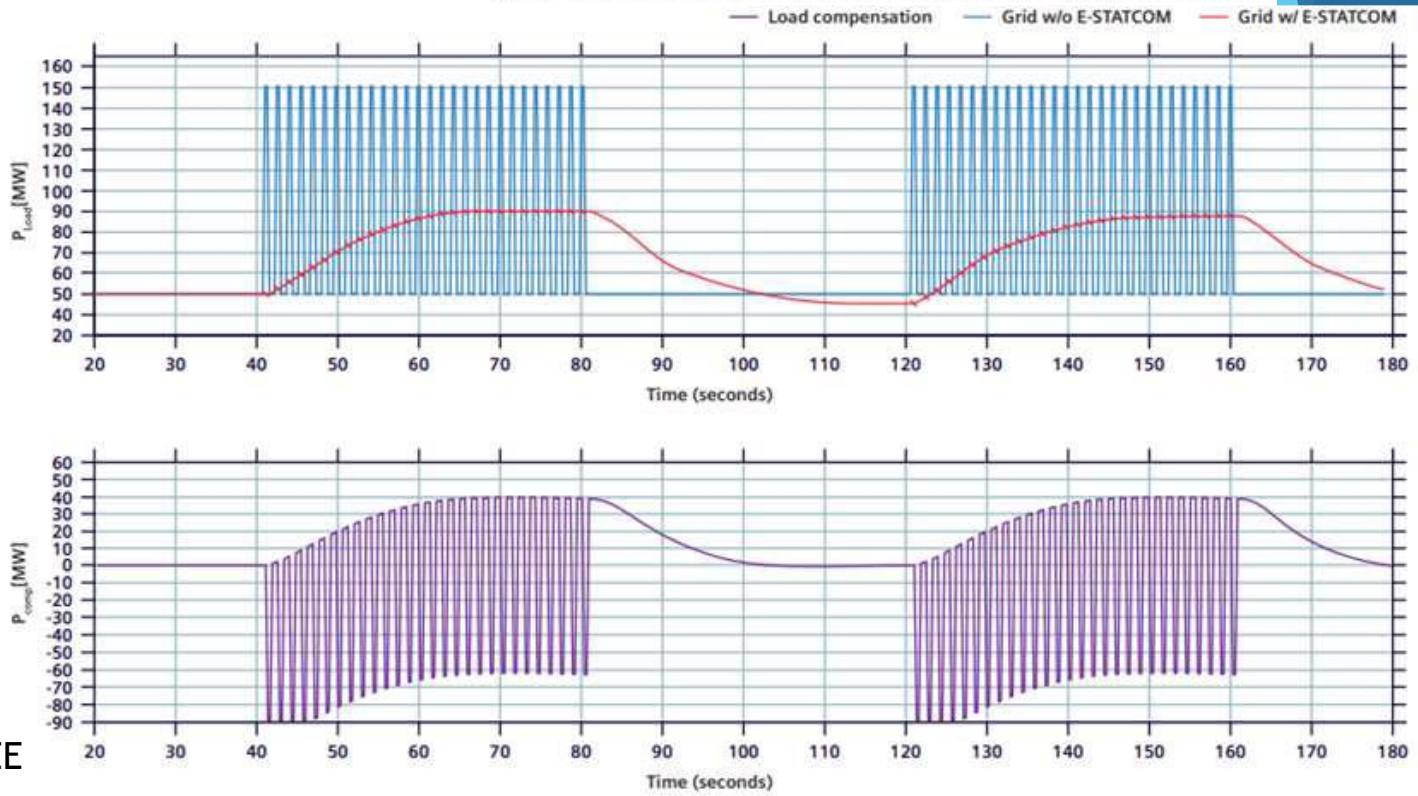

"Supercapacitors: Solving AI's Energy Spikes," published by IEEE Spectrum on May 6, 2025.

Mitigation Strategies – II
Microgrids and BTM assets

- Ability to operate a part of the electric grid with a specified control boundary is a microgrid
- There is no specific size for Microgrids so they can be flexibly applied
- Critical loads are the key load groups including processors, thermal, and fire management
- BTM DER assets can invariably help in powering the facilities to boost resilience, reliability, and improve PQ issues
- Specific design and operational considerations such as GFM assets, diesel/NG generation, coordination and controls, and protection are key considerations

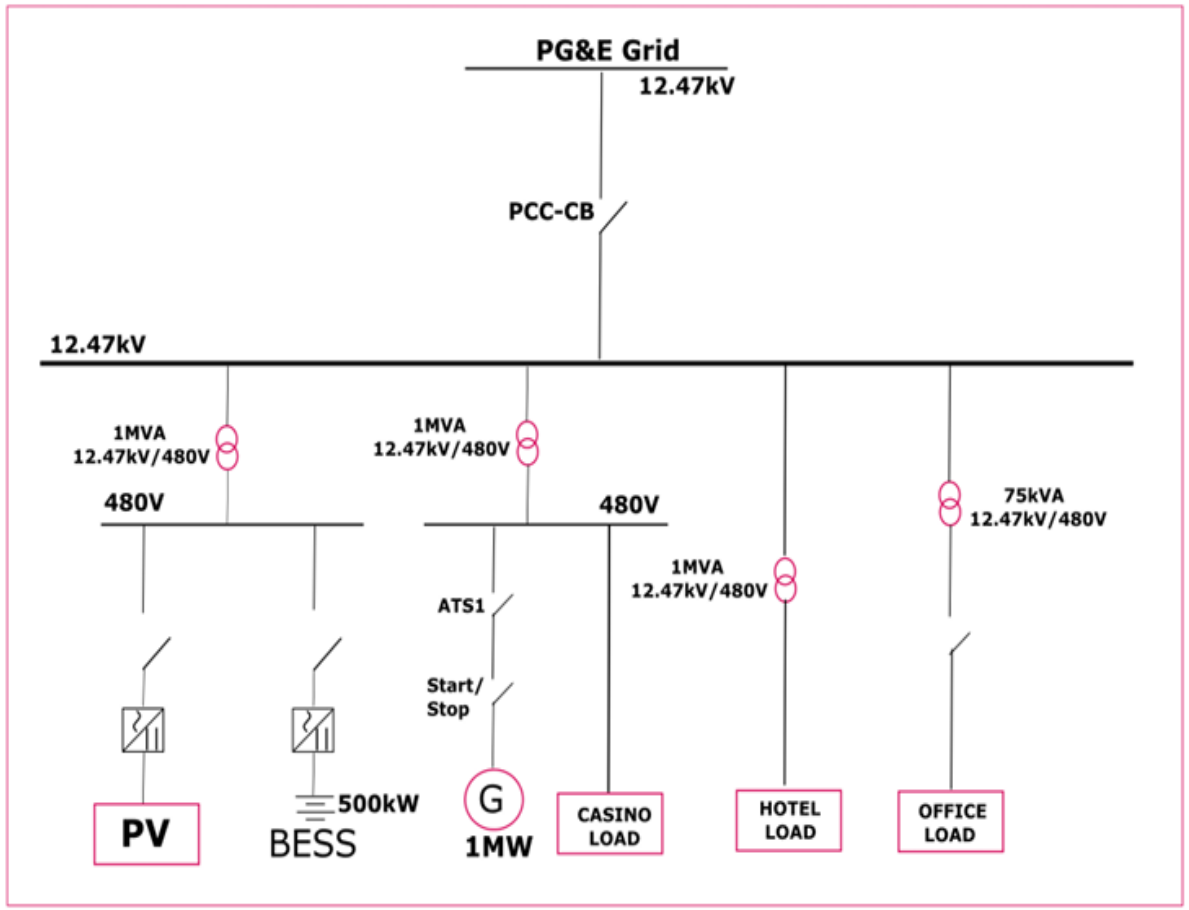

Highlight Summary

- Data center architectures, needs, requirements, codes, and standards are fast evolving as they are being deployed
- Unique architectures are also being developed and the transition from fully AC until the processors is being evolved to hybrid and fully DC
- Grid integration of this dynamic and pulsating load is quite challenging as it poses varying loads and ramps based the function of the data center
- Microgrid, STATCOM, supercapacitor, etc. technology can be readily applied to data center applications to enhance its effectiveness, design, and operation
- R&D – real time simulations, HIL and prototyping can be applied for rigorous verification of novel designs and integration

Manish Mohanpurkar

Manish.Mohanpurkar@gmail.com